Orange Problem/ Level 2:

A "European Hinge" is found in many modern kitchens. While it is more complex

than an ordinary hinge with a single pivot, it has the advantage of allowing the door to swing fully open without interfering with neighbouring cabinet doors.

Figure 2.64 shows the three desired door positions, designated by line BC. Find

suitable positions for the moving pivots on the hinge that will keep the fixed

pivots roughly within the target area shown

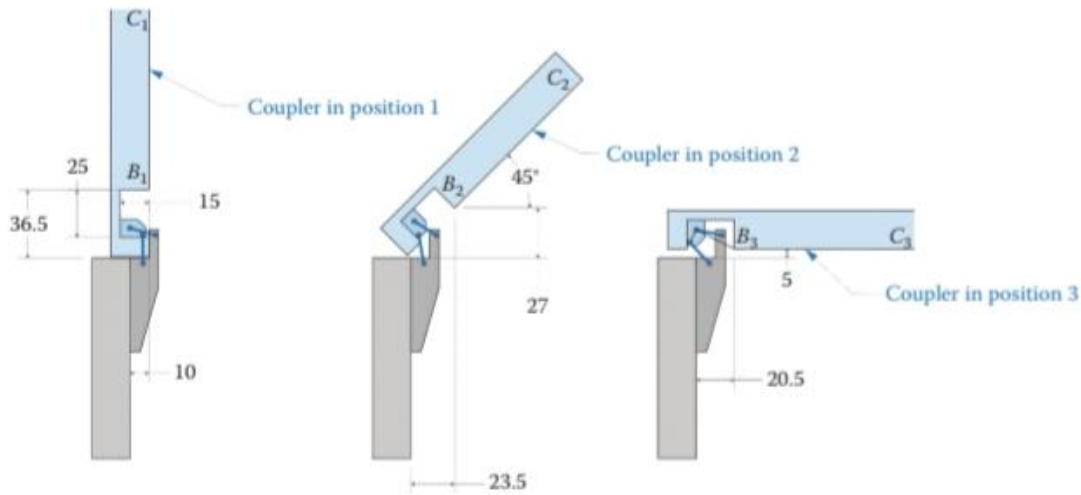

FIGURE 2.64
Problem 2.9.

Procedure:

Synthesis of linkages requires posture and dimensions of coupler, but we know only postures the question asks us to assume the stationary pivot points therefor the stationary pivots on the static frame(lower part of the hinge) is given like in the fig below:

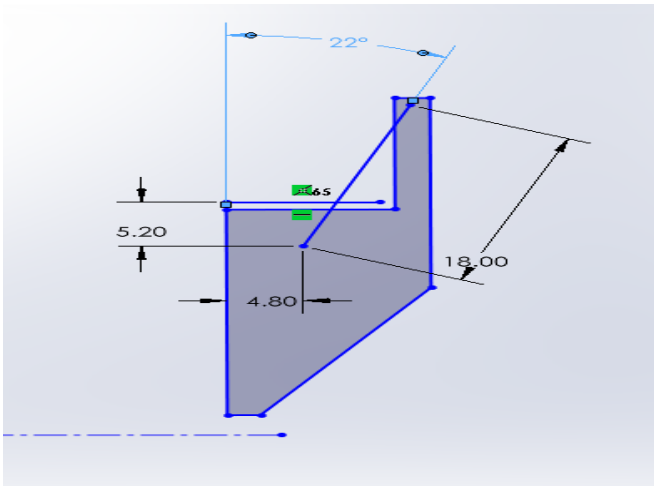

As we know the different posture of the moving hinge but we don't know the dimensions of hinge positions on the moving hinge , but we are allowed to assume different positions on the static hinge more over using the different postures we can find out different postures of the static hinge relative to the moving hinge , and the with these different postures we use relative pole method to find the pivot points on the moving hinge.

Basic Configuration of European Hinge:

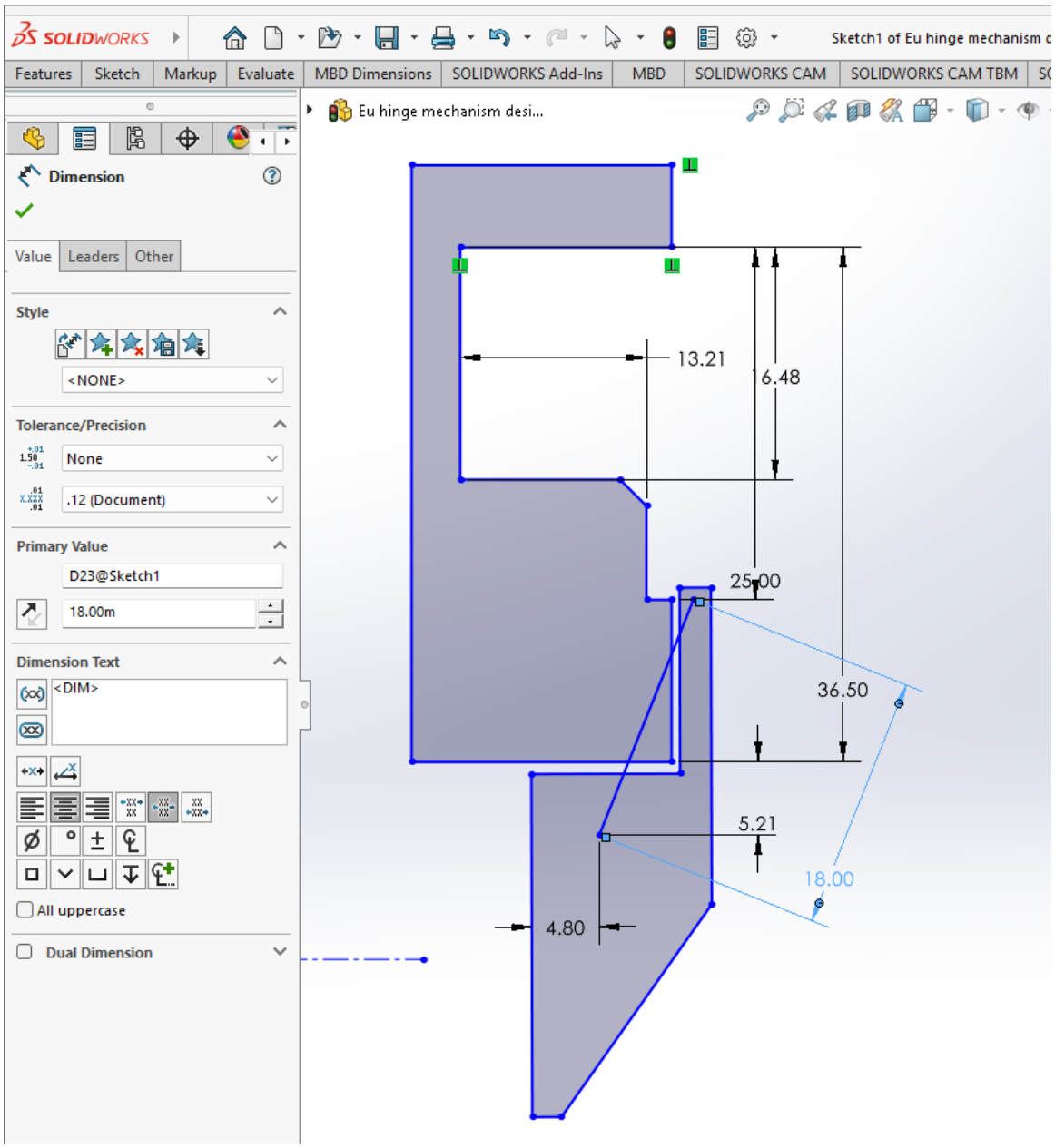

The process:

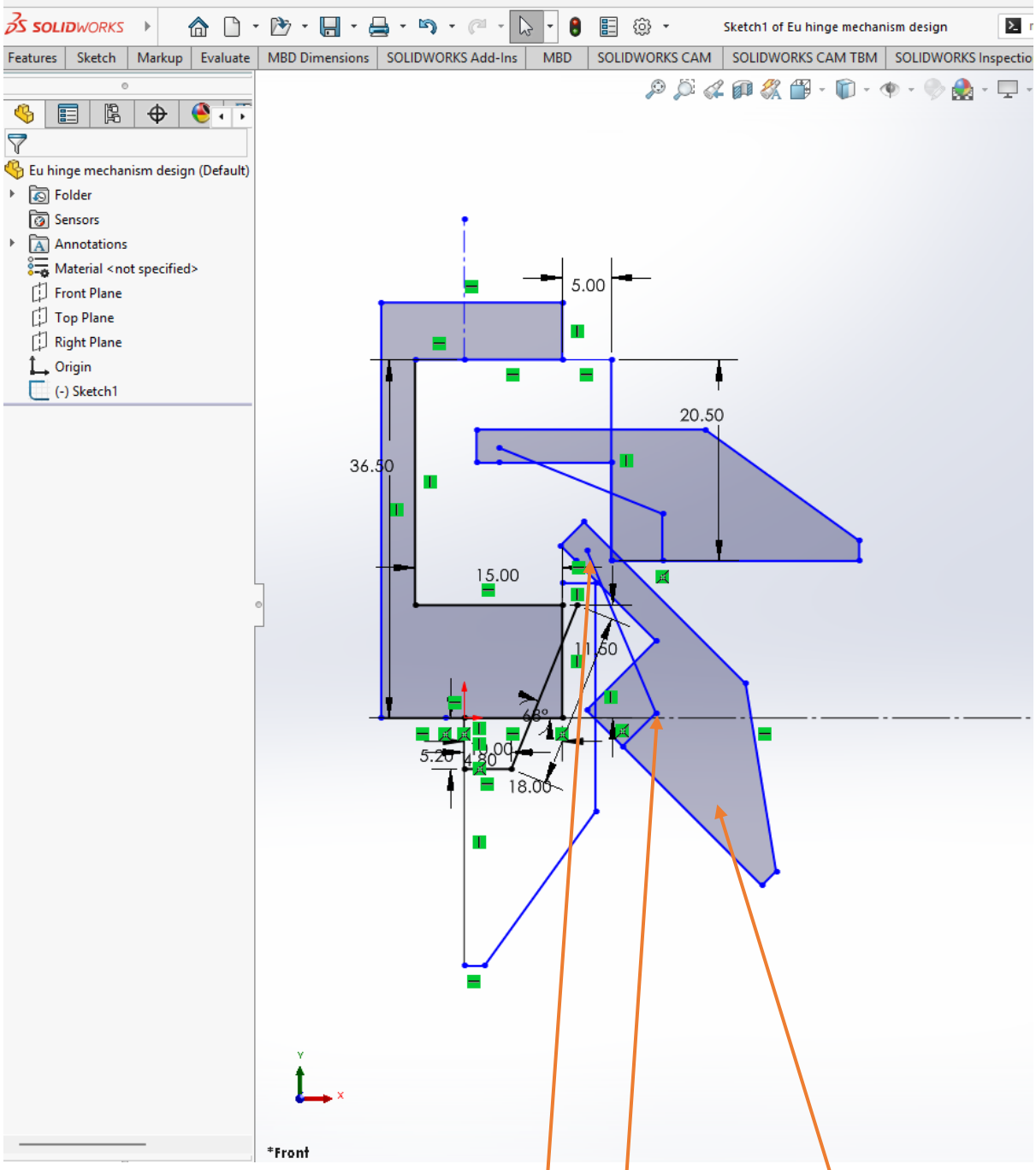

Three different positions of the static part of the European hinge , we take the assumed pivot points on the static hinge

Different orientation of ground hinges:

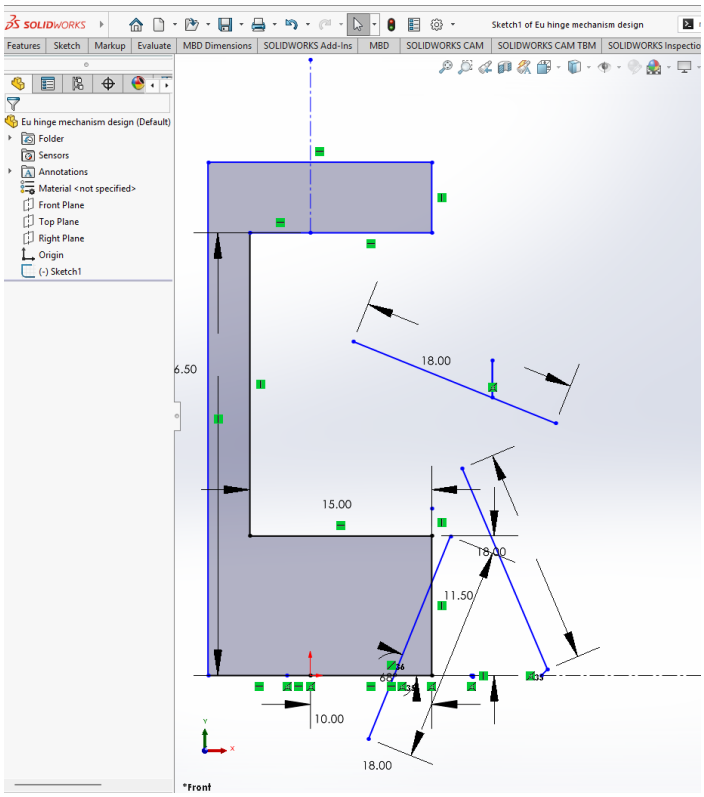

With mid normals:

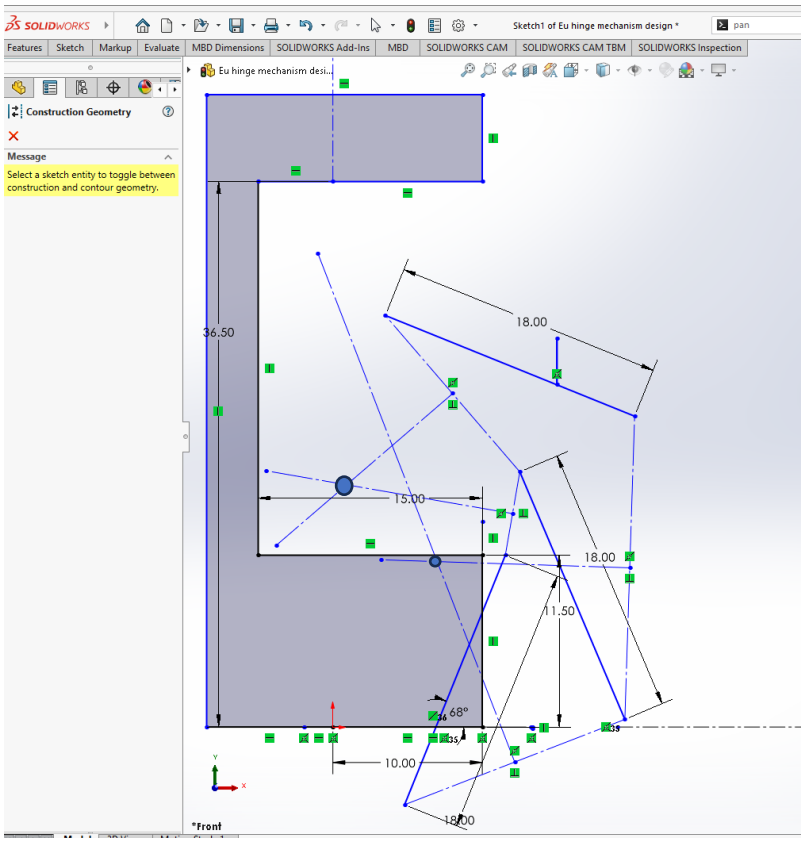

With pivot points and links attached:

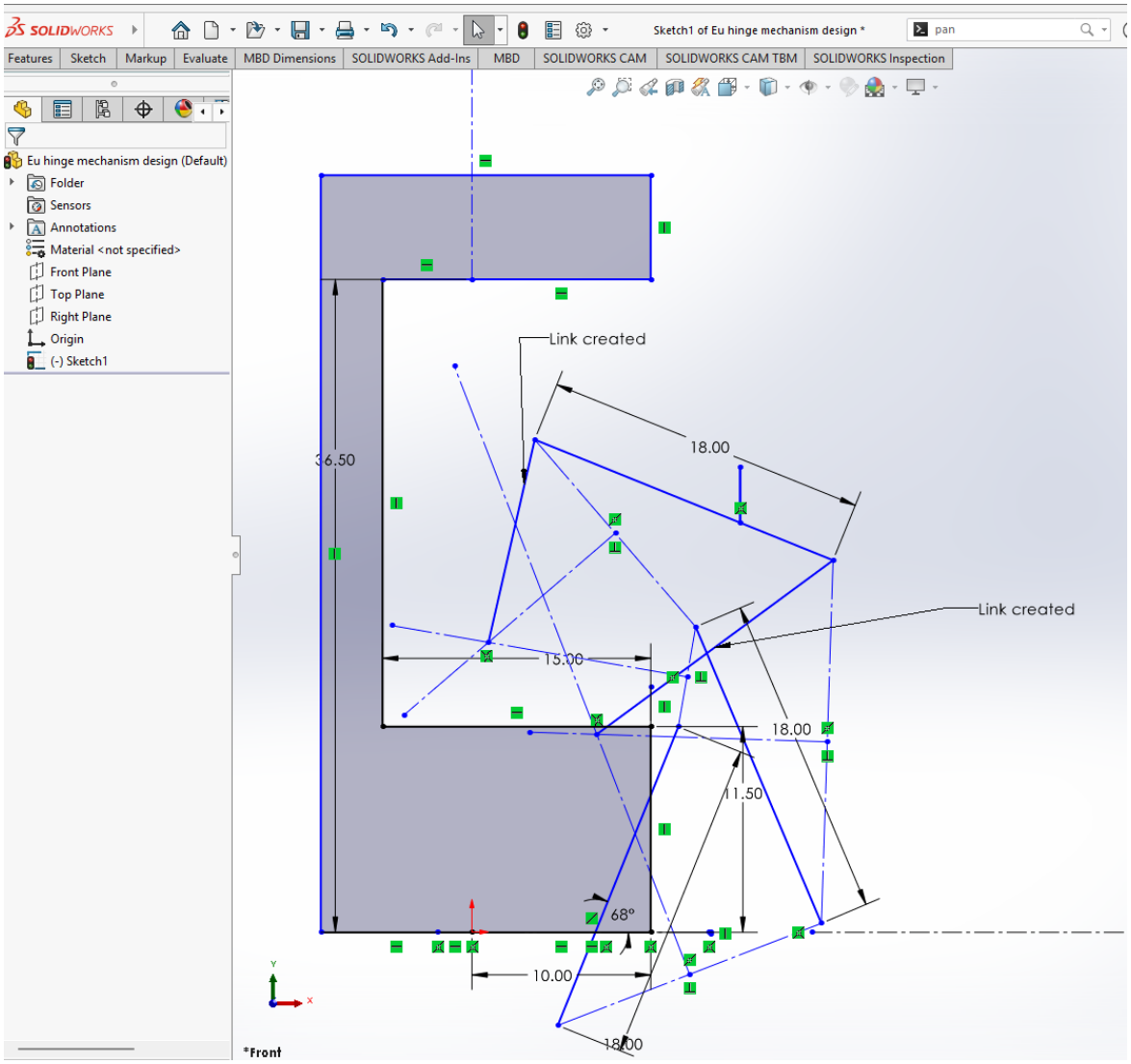

PTO…….

Final Synthesis:

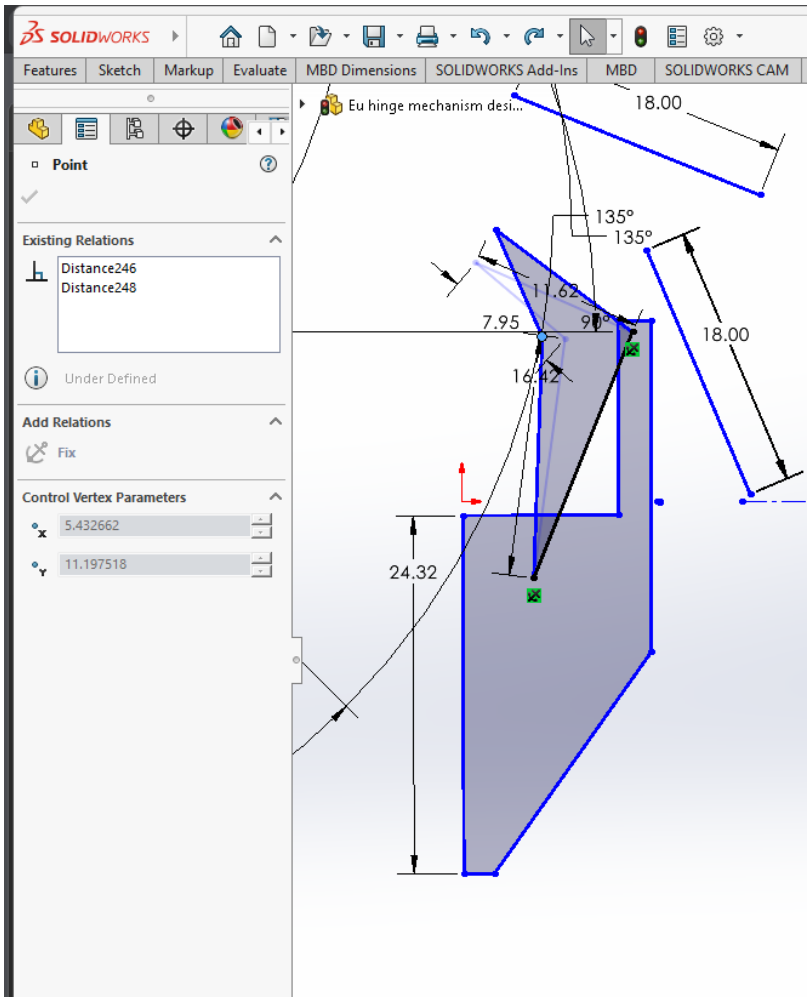

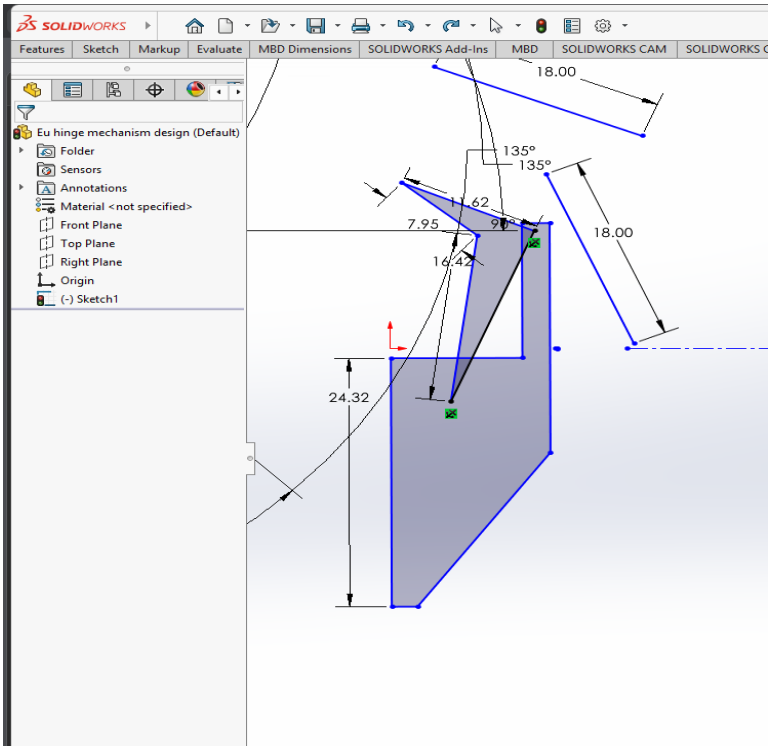

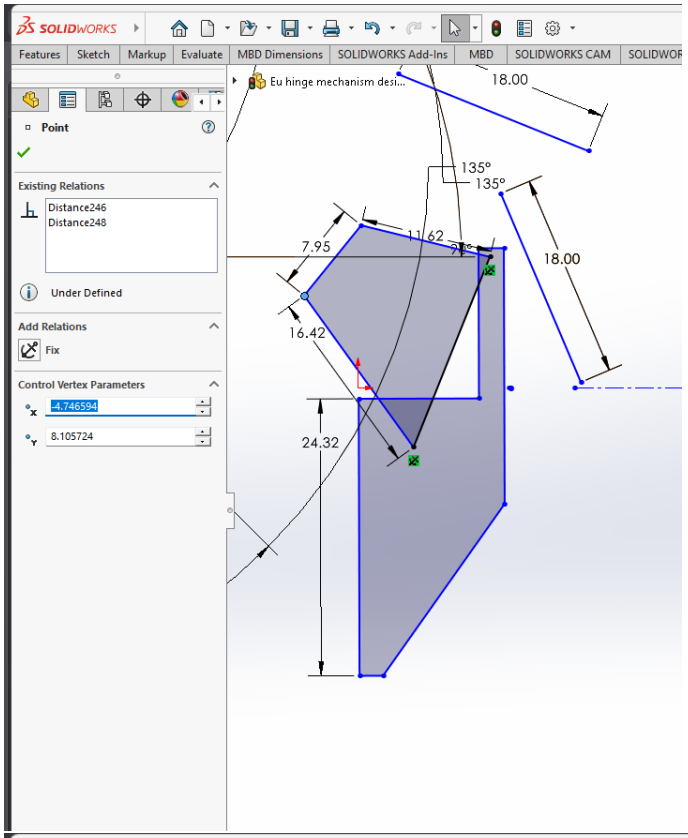
SOLIDWORKS
Features
Sketch
Markup
Evaluate
MBD Dimensions
SOLIDWORKS Add-Ins
MBD
SOLIDWORKS CAM
Eu hinge mechanism desi...
Point
Existing Relations
Distance246
Distance248
Under Defined
Add Relations
Fix
Control Vertex Parameters
-4.746594
8.105724
18.00
135°
135°
7.95
11.62
90°
18.00
16.42
24.32

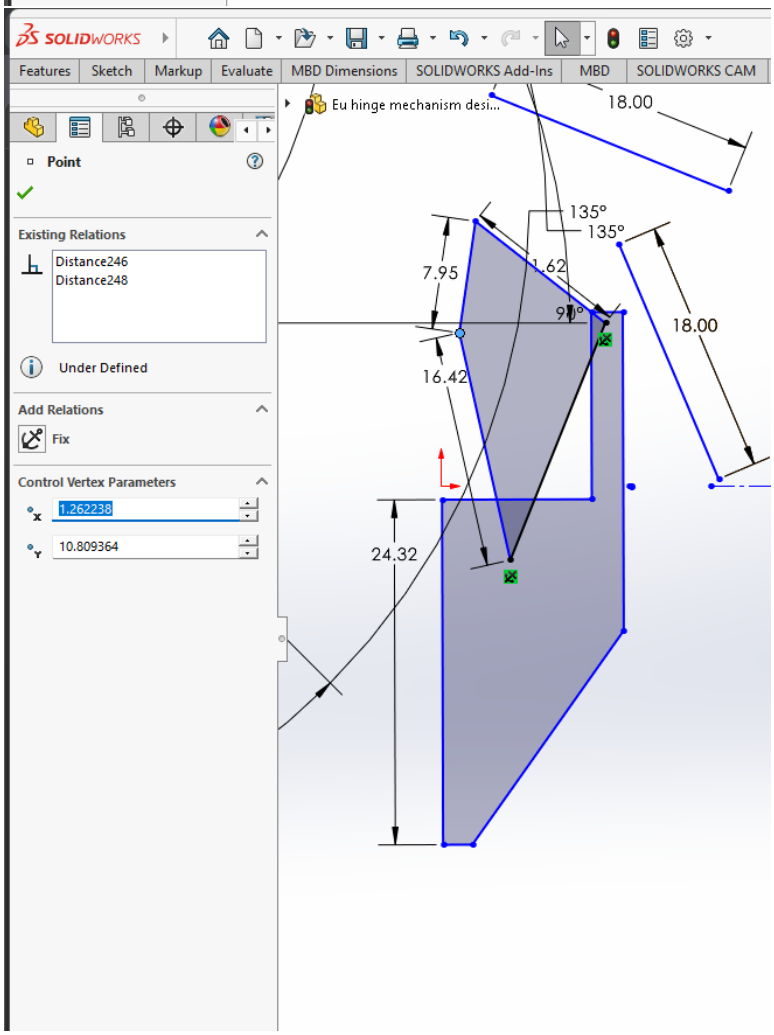
SOLIDWORKS
Features
Sketch
Markup
Evaluate
MBD Dimensions
SOLIDWORKS Add-Ins
MBD
SOLIDWORKS CAM
Eu hinge mechanism desi...
Point
Existing Relations
Distance246
Distance248
Under Defined
Add Relations
Fix
Control Vertex Parameters
1.262238
10.809364
18.00
135°
135°
7.95
1.62
90°
18.00
16.42
24.32

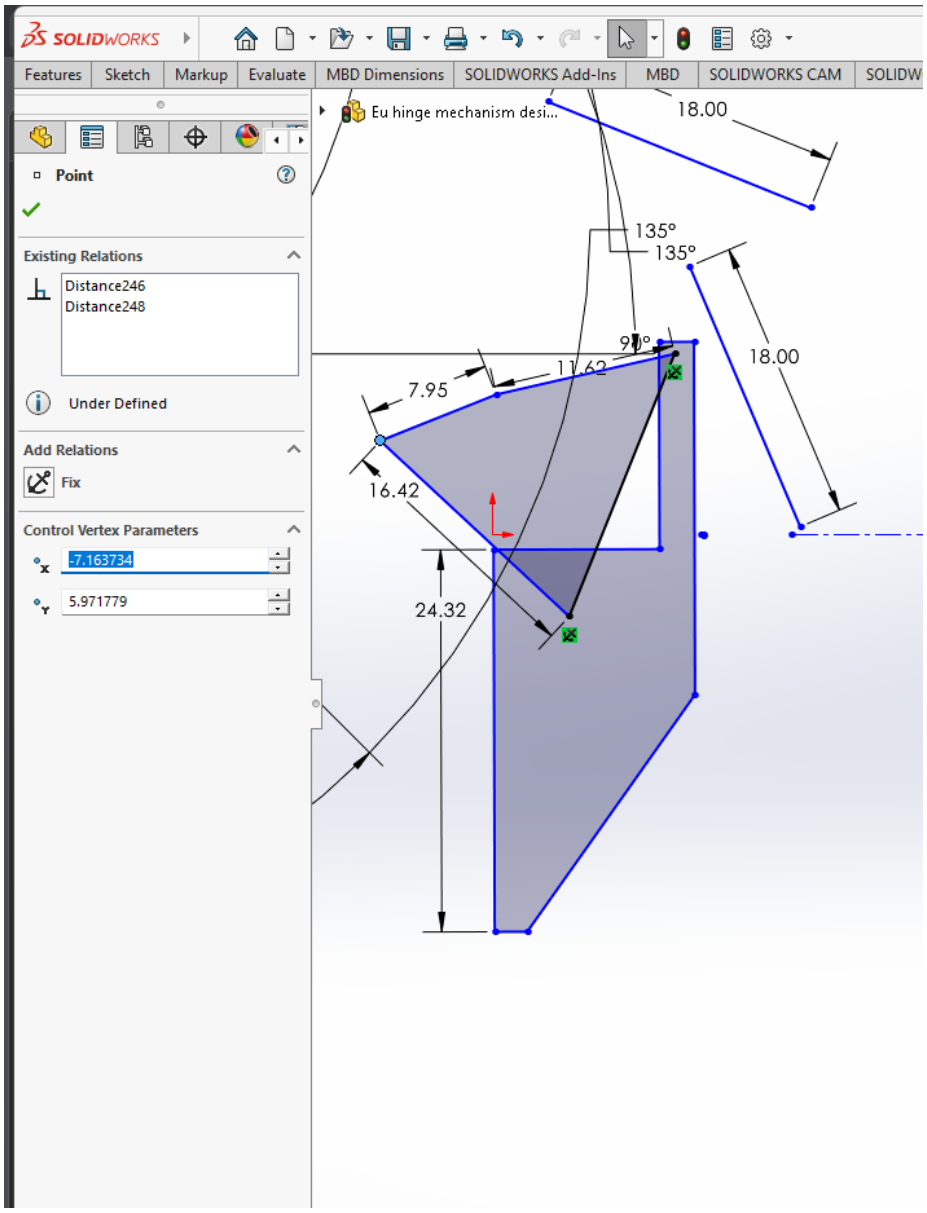
SOLIDWORKS
Features
Sketch
Markup
Evaluate
MBD Dimensions
SOLIDWORKS Add-Ins
MBD
SOLIDWORKS CAM
SOLIDW
Eu hinge mechanism desi...
Point
Existing Relations
Distance246
Distance248
Under Defined
Add Relations
Fix
Control Vertex Parameters
-7.163734
5.971779
18.00
135°
135°
18.00
90°
11.62
7.95
16.42
24.32

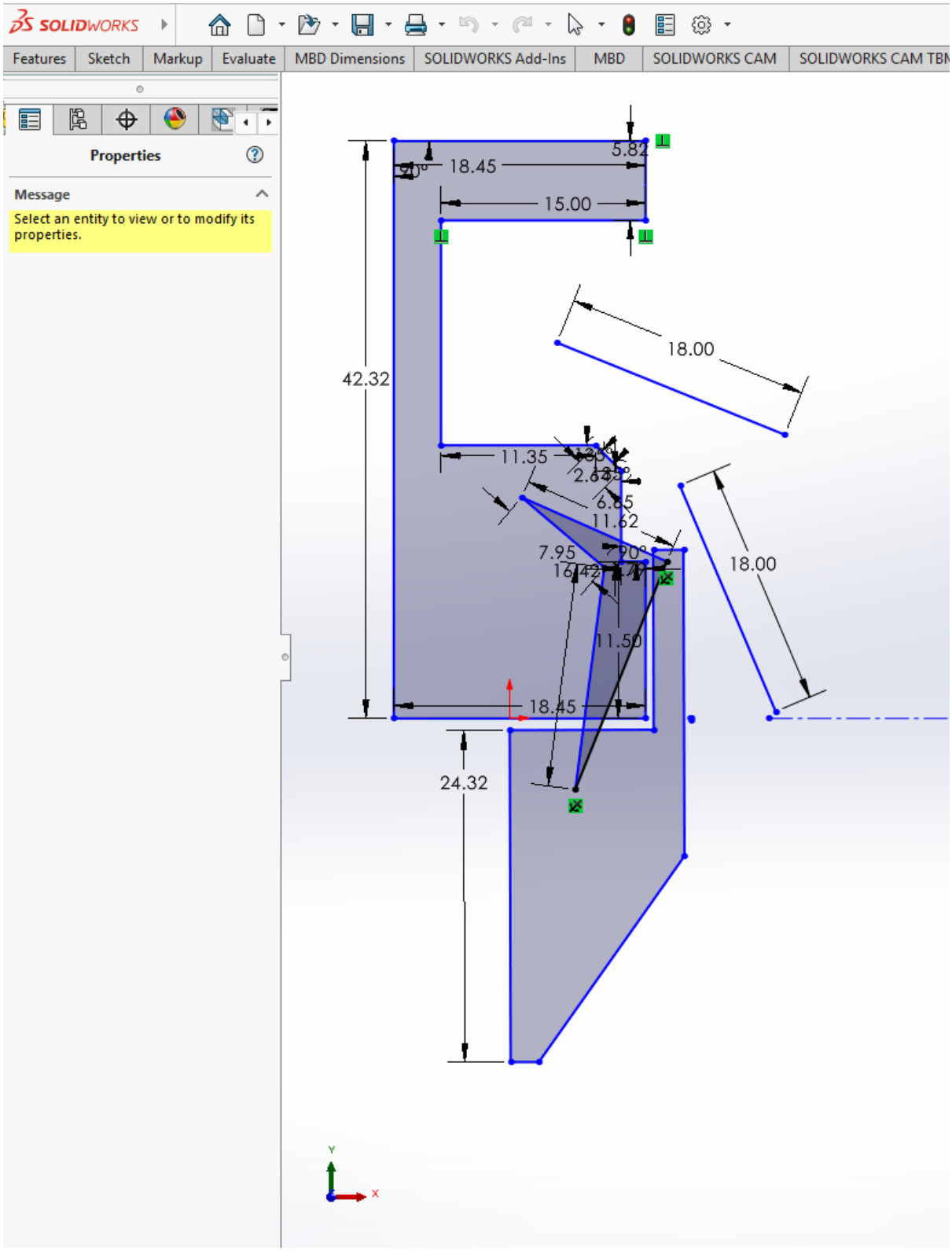
SOLIDWORKS
Features
Sketch
Markup
Evaluate
MBD Dimensions
SOLIDWORKS Add-Ins
MBD
SOLIDWORKS CAM
SOLIDWORKS CAM TBM
Properties
Message
Select an entity to view or to modify its properties.
5.82
18.45
15.00
18.00
42.32
11.35
6.85
11.62
7.95
90°
18.00
11.50
18.45
24.32
Y
X